Double-Groove Cast Iron Pulley

Legacy item 1-2BK25-B

All dimensions in inches

Item #	Diameters			Bore Size	Dimensions			
	Outside	Datum A	Datum B		F	L	P	C
601351	2.50"	1.90"	2.30"	5/8"	1 3/4"	1 31/32"	15/32"	1/4"

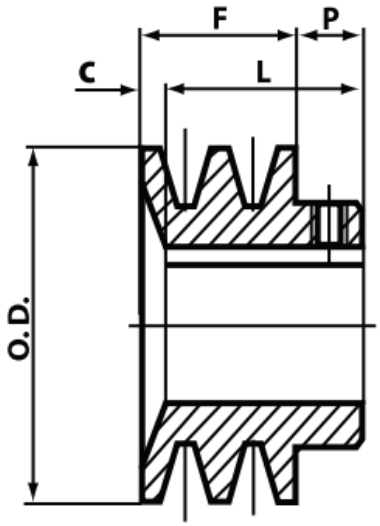

Outside and Datum Diameters

These pulleys accept both 'A' (1/2") belts or 'B' (5/8") belts. The outside diameter is measured at the outside of pulley. The datum diameters are an industry standard reference point used for calculations such as center distance and belt length. The datum system replaces the pitch system for classical belts and pulleys to compensate for differences in manufacturers construction of belts.

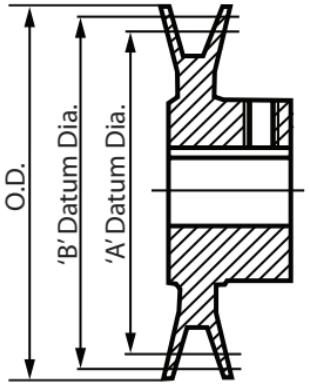

Finished bore with keyway (3/16" x 3/32") | One set screw