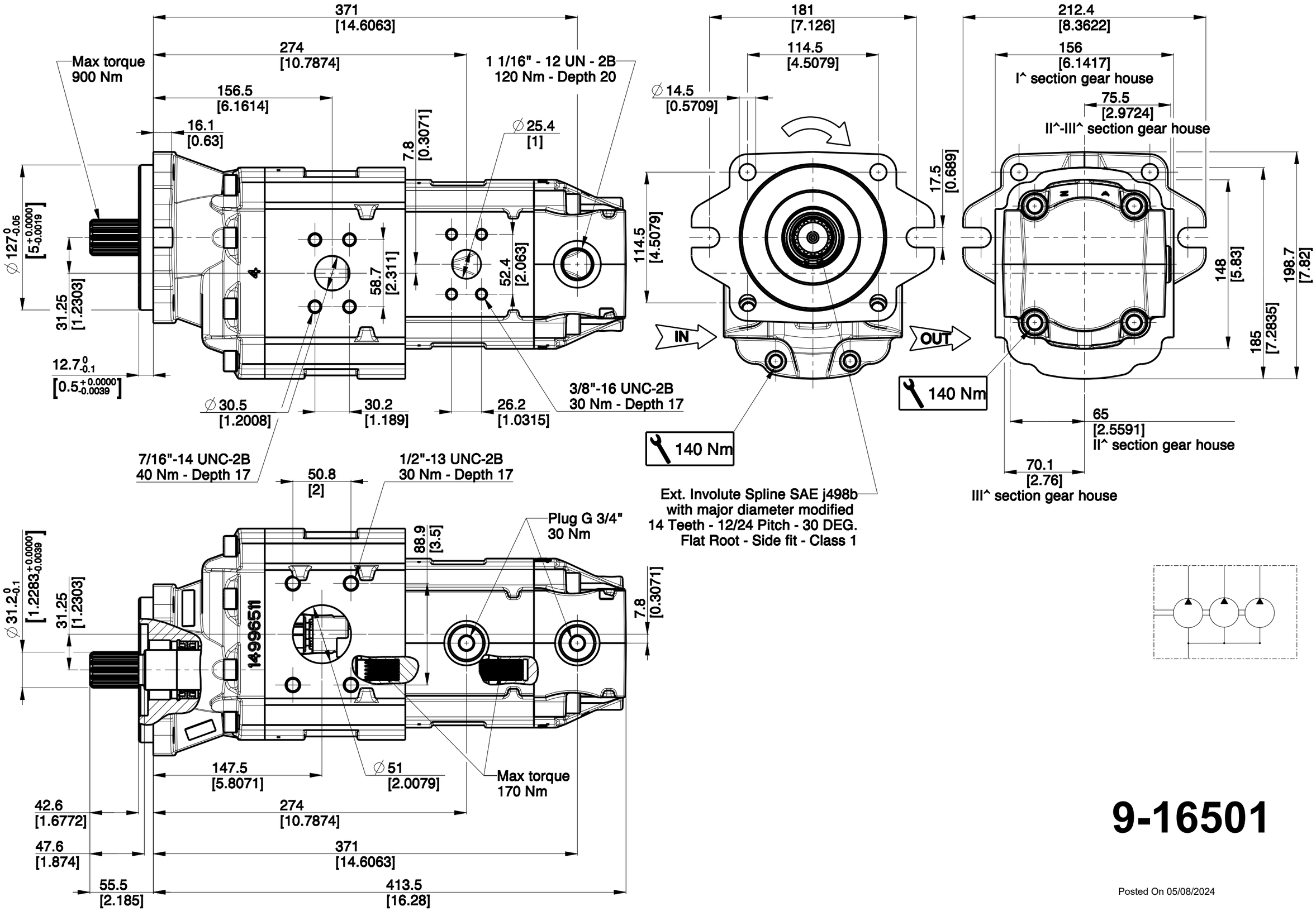

9-16501

Posted On 05/08/2024