REVISION HISTORY					
ZONE	REV	DESCRIPTION	DATE	BY	ECO
-	A	DRAWING RELEASE	18OCT02	MJC	2539
A2,A3	B	REDESIGNED CROSS SECTION	4NOV02	MJC	2539
C2	B	RELOCATED HOLES	4NOV02	MJC	2539
-	C	ADDED 90 +0/-2.0 DIM	30JAN02	TMB	2656
-	D	ADDED POWDER COAT NOTE	7MAR03	MJC	2699
B4	E	90.0 WAS 90+0/-2	30MAY03	MJC	2818
B2	F	4X .680 WAS 4X .656	6OCT10	DB	14093

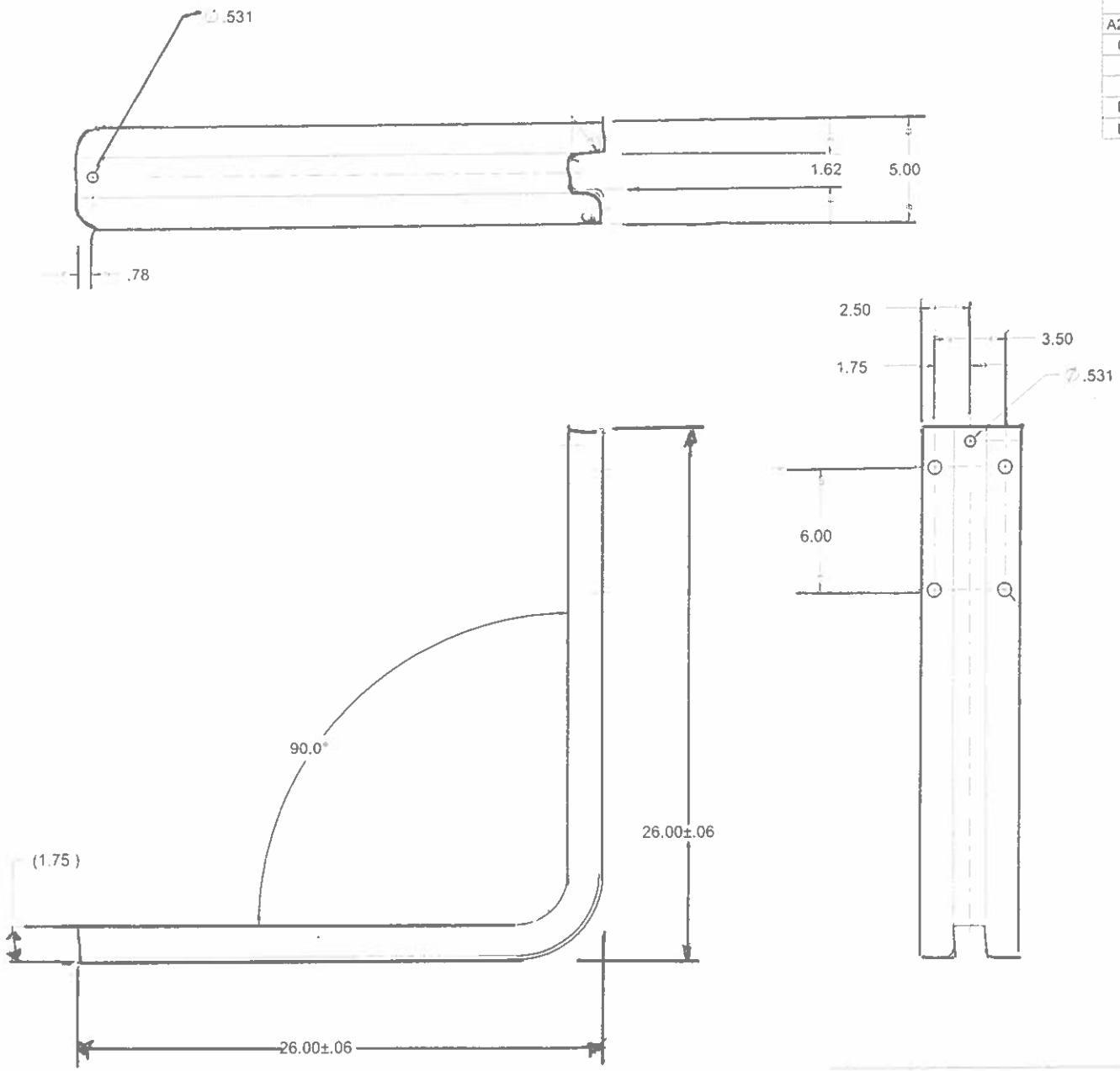

NOTES:
REMOVE BURRS AND SHARP EDGES
FINISH: BLACK POWDER COAT

MATERIAL
CARBON STEEL ASTM A569 OR A622
AISI 1010-1020 HRPO

ALL SHEETS ARE THE SAME REVISION STATUS

THIS ITEM IS A PROPRIETARY ITEM OF BUYERS PRODUCTS CO AND REPRODUCTION OR USE THEREOF IN ANY MANNER WHATSOEVER IS UNAUTHORIZED EXCEPT WITH THE EXPRESS WRITTEN CONSENT OF BUYERS PRODUCTS CO ANY USE DETRIMENTAL IN ANY WAY TO THE INTERESTS OF BUYERS PRODUCTS CO IS EXPRESSLY PROHIBITED

NAME MJC DATE 29AUG02
CHK DATE
APP DATE

UNLESS OTHERWISE SPECIFIED DIMENSIONS ARE IN INCHES
X ± 1 ± 1°
.XX ± 03
.XXX ± 010
INTERPRET DIM AND TOL PER ASME Y14.5

Buyers
PHONE (440) 974-8888
4049 TYLER BLVD MENTOR, OH 44060
FAX (440) 974-0165

TITLE
BRACKET, RESERVOIR SUPT

SIZE C | CAGE CODE - | DWG NO. 3005186 | REV F
SCALE 0.25 | WEIGHT - | SHEET 1 of 1

REVISION HISTORY					
ZONE	REV	DESCRIPTION	DATE	BY	ECO
-	A	DWG RELEASE,40+/-.13 WAS 40+.5/-0	10MAR03	MJC	2705

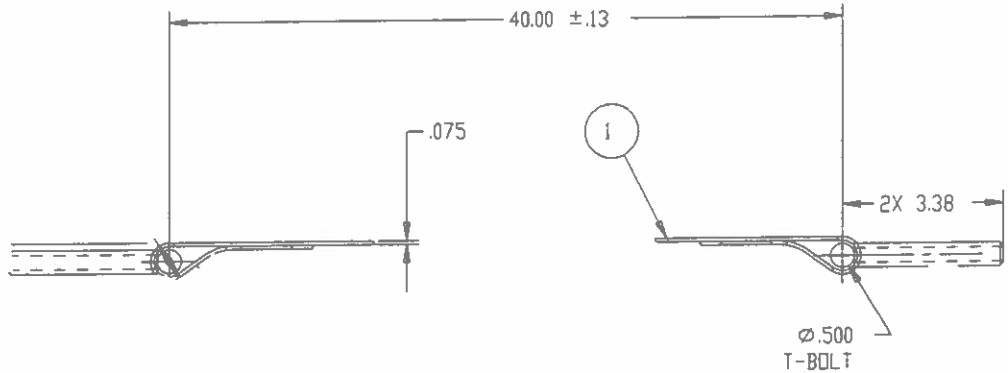

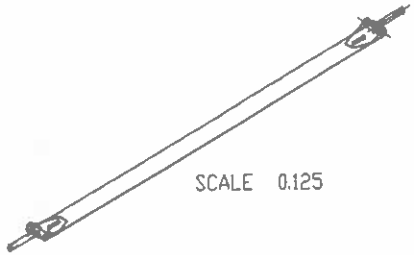

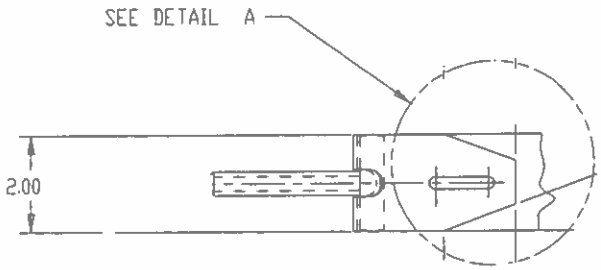

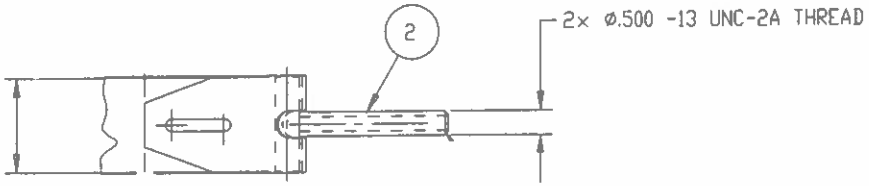

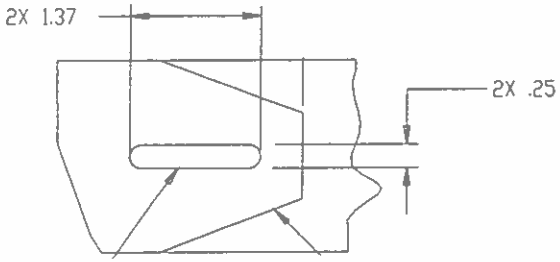

DETAIL A
SCALE 1.000

BILL OF MATERIALS			
ITEM	PART NO.	QTY.	DESCRIPTION
1	SMS0104003SST	1	STRAP, SST, SQ. SM 40"
2	SMS40BOLTSST	2	T-BOLT 1.2-13 STAINLESS STEEL

MATERIAL
STAINLESS STEEL ASTM A240 TYPE 430 BA, BRIGHT POLISHED FINISH

ALL SHEETS ARE THE SAME REVISION STATUS

THIS ITEM IS A PROPRIETARY ITEM OF BUYERS PRODUCTS CO. AND REPRODUCTION OR USE THEREOF IN ANY MANNER WHATSOEVER IS UNAUTHORIZED EXCEPT WITH THE EXPRESS WRITTEN CONSENT OF BUYERS PRODUCTS CO. ANY USE DETRIMENTAL IN ANY WAY TO THE INTERESTS OF BUYERS PRODUCTS CO. IS EXPRESSLY PROHIBITED.

NAME	MJC	DATE	23OCT02
CHK		DATE	
APP		DATE	

UNLESS OTHERWISE SPECIFIED DIMENSIONS ARE IN INCHES
.X ± .1 ∠ ±1°
.XX ± .03
.XXX ± .010
INTERPRET DIM AND TOL PER ASME Y14.5

Buyers
PHONE (440) 974-8888 9049 TYLER BLVD, MENTOR, OH 44060 FAX (440) 974-0865

TITLE
STRAP, SST, 50,70 GAL STL, SM

SIZE	CAGE CODE	DWG NO	REV
C	-	SMS010BK40SST	A
SCALE 0.50	WEIGHT -	SHEET 1 of 1	

DWG NO. SMS010BK40SST SH 1