Item Number: 906958

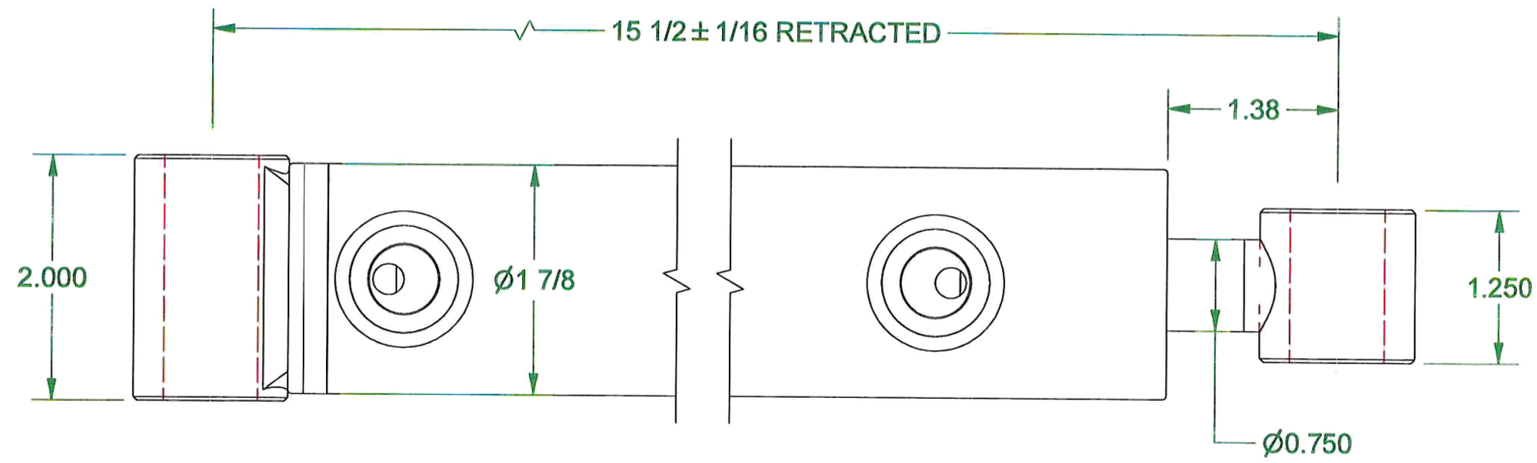

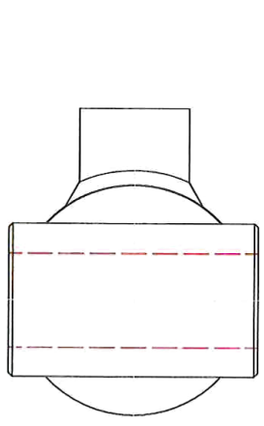

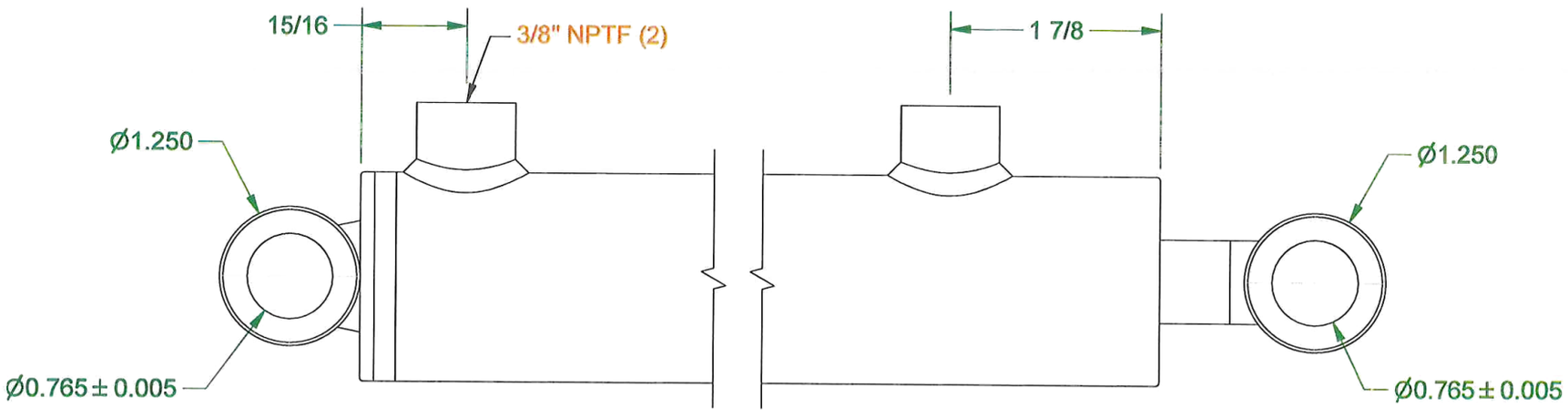

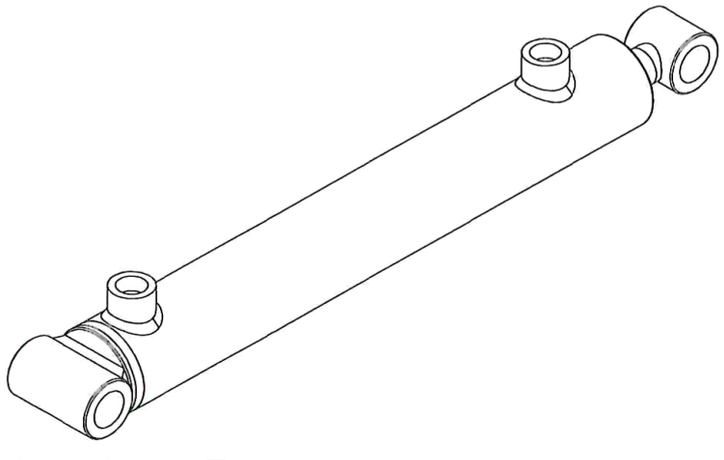

3RD ANGLE PROJECTION ALL DIMENSION IN INCHES TOLERANCES UNLESS SPECIFIED 0.0 ± 0.06 0.00 ± 0.03 0.000 ± 0.015 FRACTIONS ± 1/16	PAINT COLOR: BLACK CYLINDER WEIGHT: 7 lbmass CYL. SPECIFICATIONS MAX. PRESSURE: 1500 PSI OPERATING TEMP: 200° F ROD SPEED: 18 IPS
PART NUMBER: 20360	DESCRIPTION: 1.500 BORE X 10.000 STROKE X 0.750 ROD DIA.