Item Number: 906959

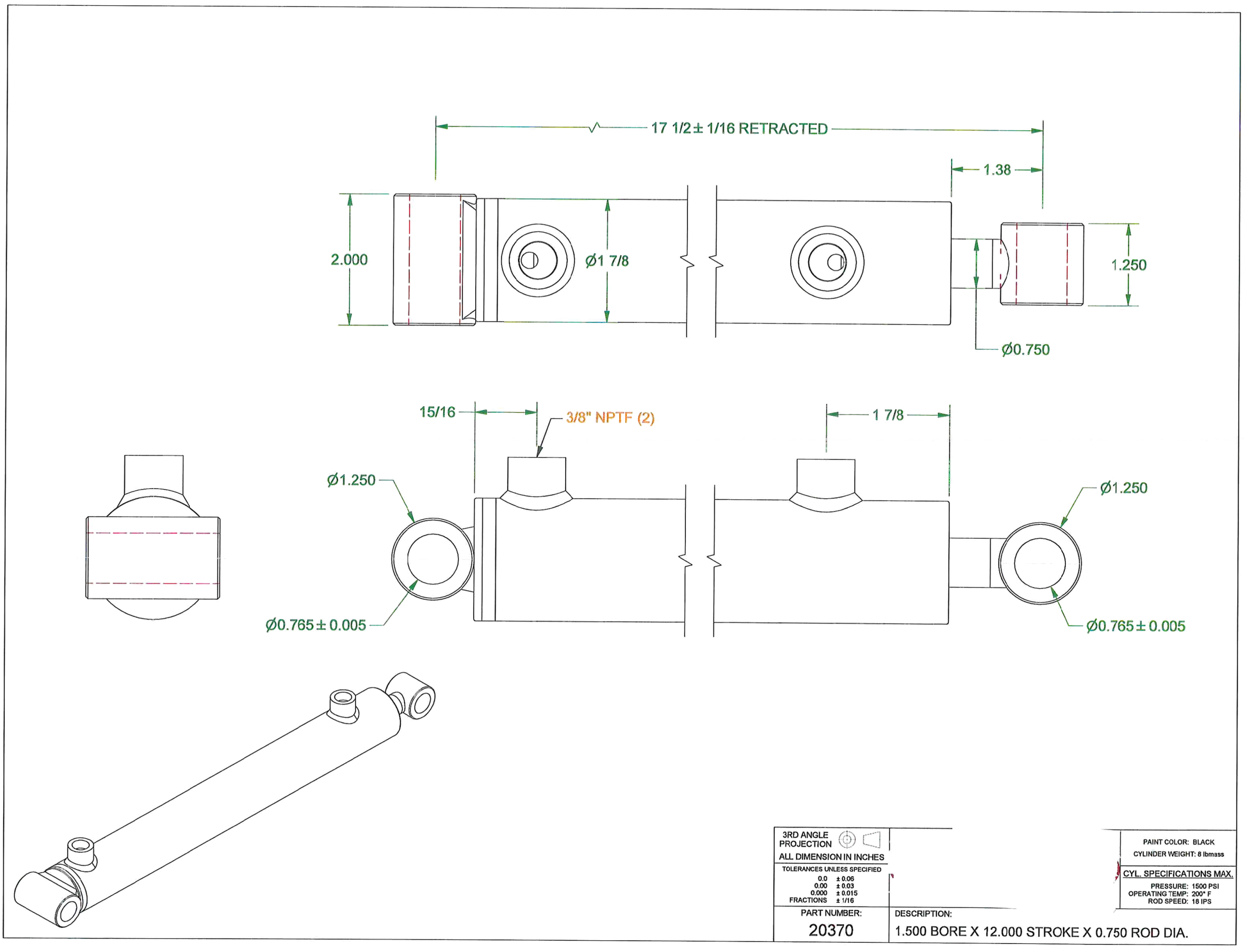

3RD ANGLE PROJECTION	
ALL DIMENSION IN INCHES	
TOLERANCES UNLESS SPECIFIED 0.0 ± 0.06 0.00 ± 0.03 0.000 ± 0.015 FRACTIONS ± 1/16	
PART NUMBER: 20370	DESCRIPTION: 1.500 BORE X 12.000 STROKE X 0.750 ROD DIA.

PAINT COLOR: BLACK
CYLINDER WEIGHT: 8 lbmass

CYL. SPECIFICATIONS MAX.
PRESSURE: 1500 PSI
OPERATING TEMP: 200° F
ROD SPEED: 18 IPS