Item Number: 906968

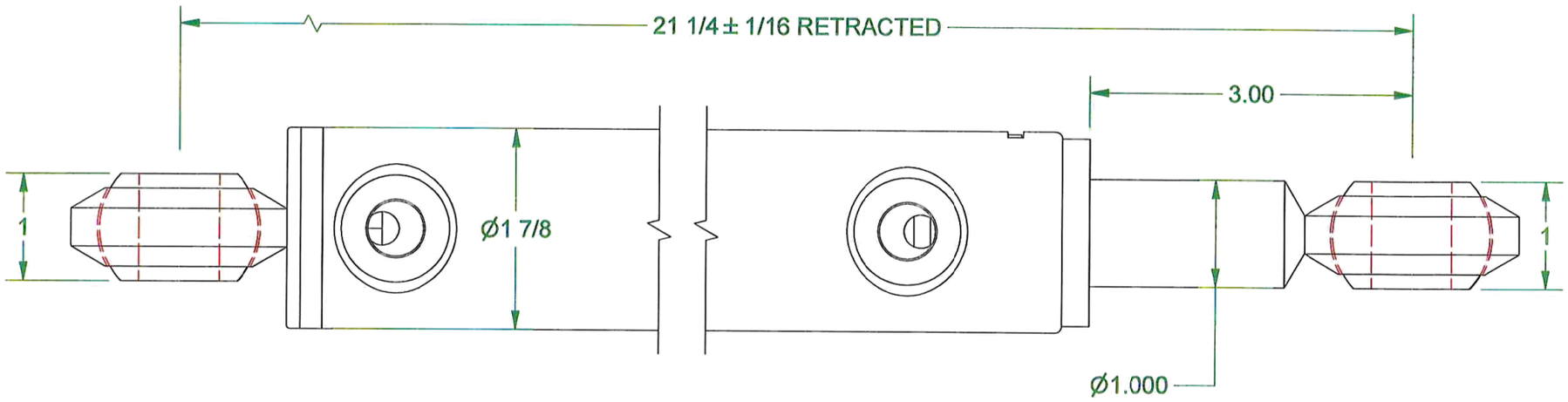

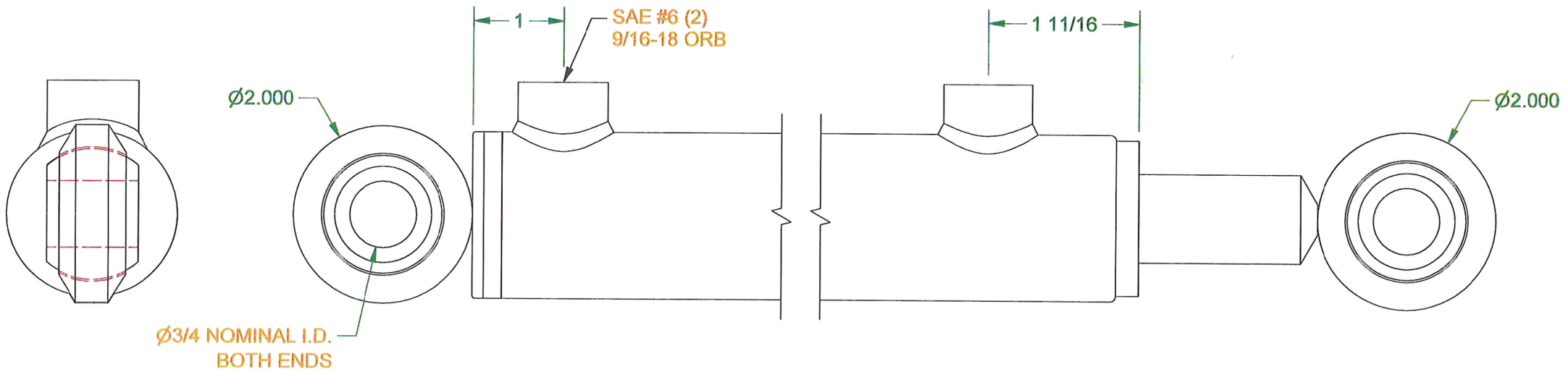

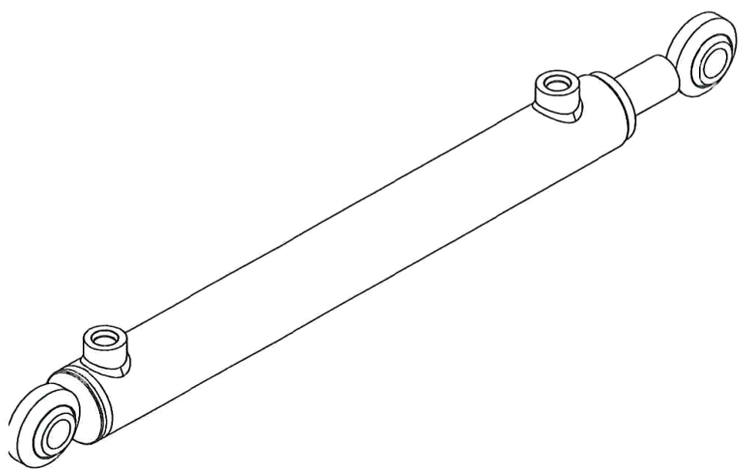

3RD ANGLE PROJECTION ALL DIMENSION IN INCHES TOLERANCES UNLESS SPECIFIED 0.0 ± 0.06 0.00 ± 0.03 0.000 ± 0.015 FRACTIONS ± 1/16	PAINT COLOR: BLACK CYLINDER WEIGHT: 10 lbmass CYL. SPECIFICATIONS MAX. PRESSURE: 3000 PSI OPERATING TEMP: 200° F ROD SPEED: 18 IPS
PART NUMBER: 20210	DESCRIPTION: 1.500 BORE X 14.000 STROKE X 1.000 ROD DIA.