Item Number: 906998

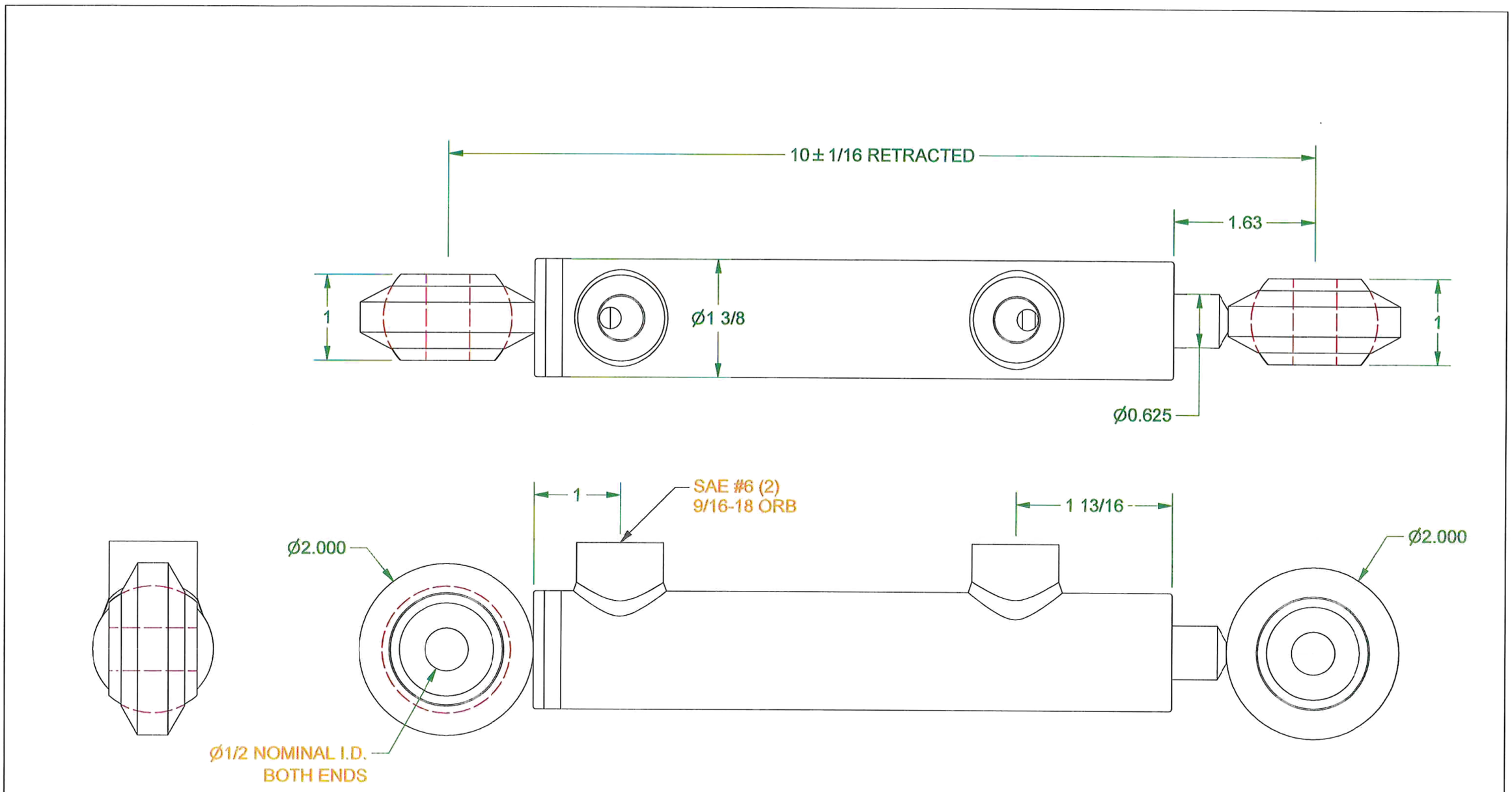

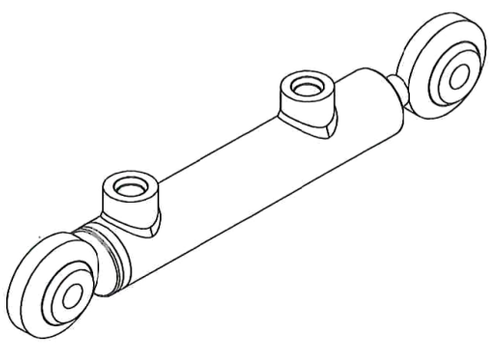

3RD ANGLE PROJECTION ALL DIMENSION IN INCHES	PAINT COLOR: BLACK CYLINDER WEIGHT: 4 lbmass
TOLERANCES UNLESS SPECIFIED 0.0 ± 0.06 0.00 ± 0.03 0.000 ± 0.015 FRACTIONS ± 1/16	CYL. SPECIFICATIONS MAX. PRESSURE: 3000 PSI OPERATING TEMP: 200° F ROD SPEED: 18 IPS
PART NUMBER: 20110	DESCRIPTION: 1.000 BORE X 4.000 STROKE X 0.625 ROD DIA.