Item Number: 907025

PC5054XT

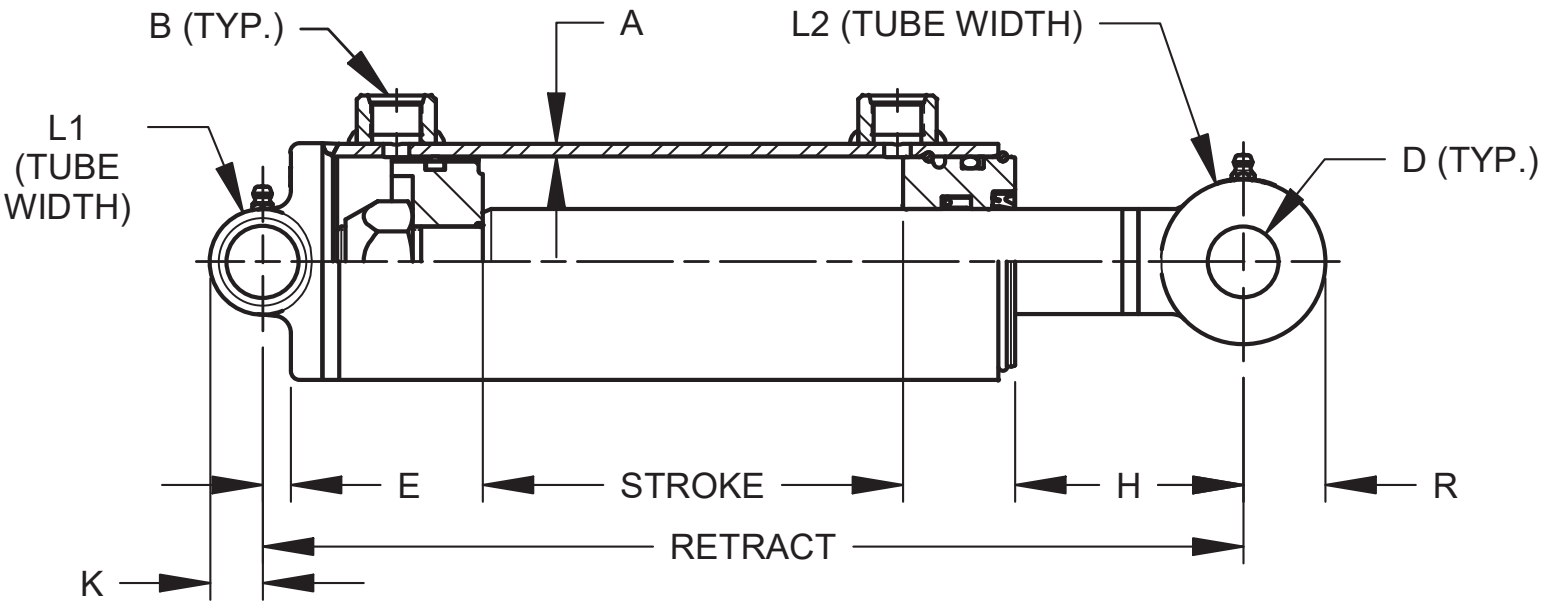

Model No.	Style	Wt.	PSI	Column Load (Lbs.)	Retract	Rod. Dia	A	B	D	E	H	K	L1	L2	R
PC5054XT	5X54	250	3000	32,100	65	2.5	5/16	#12 SAE	1-1/2	1-1/8	4	1-1/4	5-3/4	4	1-13/32