SURPLUS CENTER
800-488-3407
www.surpluscenter.com
1015 West "O" St.
LINCOLN, NE 68528

INSTALLATION SHEET FOR
LV LOADER DIRECTIONAL CONTROL VALVE
KEEP WITH PRODUCT UNTIL INSTALLED

Mounting Surface

The valve must be mounted on a flat surface. It is important not to bend or twist the casting when mounting because this may cause the spools to bind.

Can I paint my valve?

Painting valves is okay as long as the following precautions are taken: 1- All ports must be plugged and 2- the spool must be masked or taped off completely. Any paint on the spool will cause leakage when it chips off. Warranty is void if any valve is returned with paint on the spool.
Surplus Center will not accept returns on valves that have been painted.

How do I assemble the handle to the valve?

To install the handle, place the threaded end of the handle in either hole of the handle adapter and lock the handle into position with the jam nut.

Can I convert my valve to utilize "Power Beyond"?

Yes, order a LV2-W (Surplus Center Item # **901913**) cartridge kit and install it in the outlet on the side of the casting. Then remove the plug in the upper outlet for low pressure return to tank. See the dimensional schematic on the next page.

Can I convert my valve to operate in a "Closed" system?

Yes, order a LV2-C (Surplus Center Item # 901914) cartridge kit and install it in the outlet on the side of the casting, i.e. the same place the Power Beyond cartridge is installed, see the dimensional schematic on the next page. Adjust the relief valve all the way in for closed center use.

Can I convert my "A" joystick option to the "A1" option?

No.

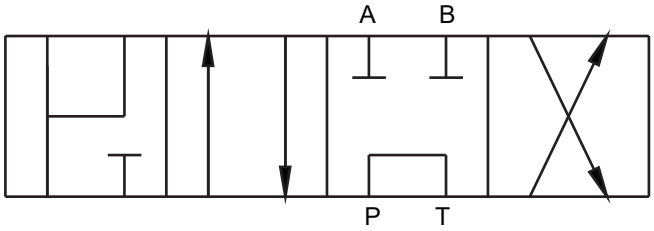

First Spool Regen -
Fourth position allows for rapid extension of cylinder.

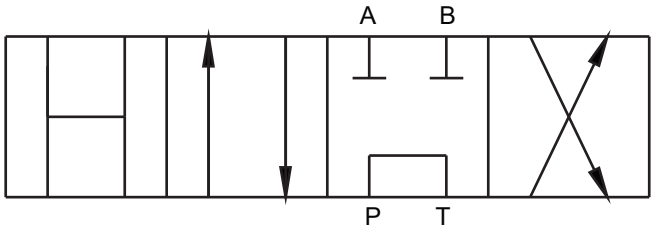

Second Spool Float-
Detented Fourth position allows cylinder to move or motor to rotate when spool is detented.

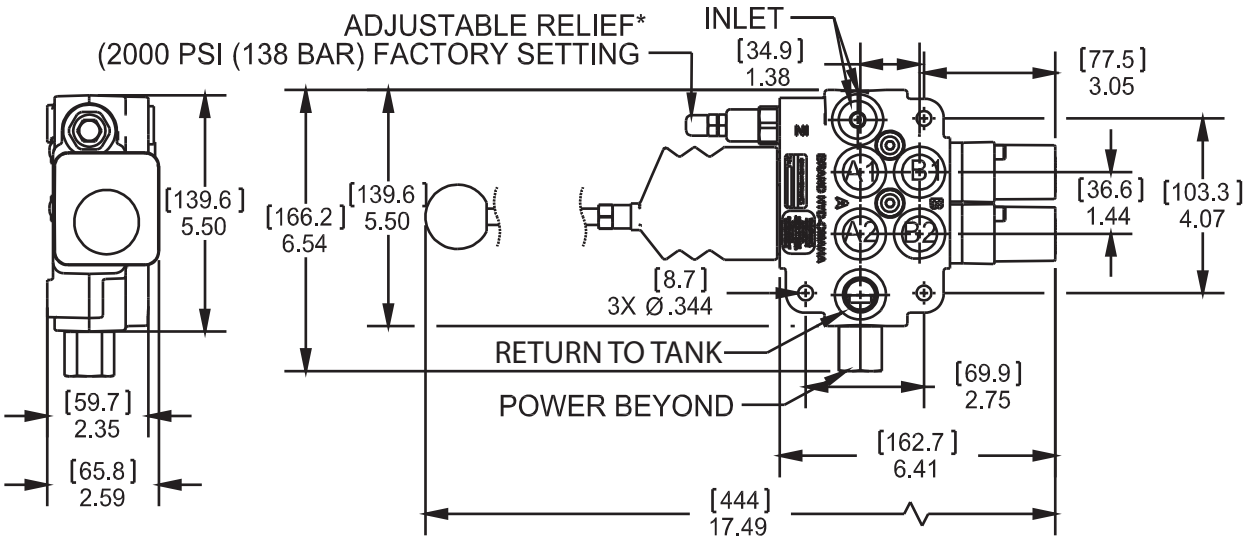

Figure 3: Dimensional data for LV valves in inches & [millimeters]

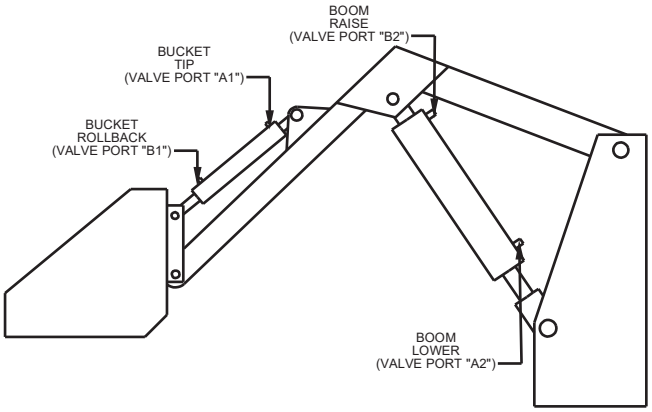

Figure 2: Typical Loader Schematic

How does joystick movement actuate the LV loader valve?

JOYSTICK OPERATION
LOOKING AT HANDLE KNOB
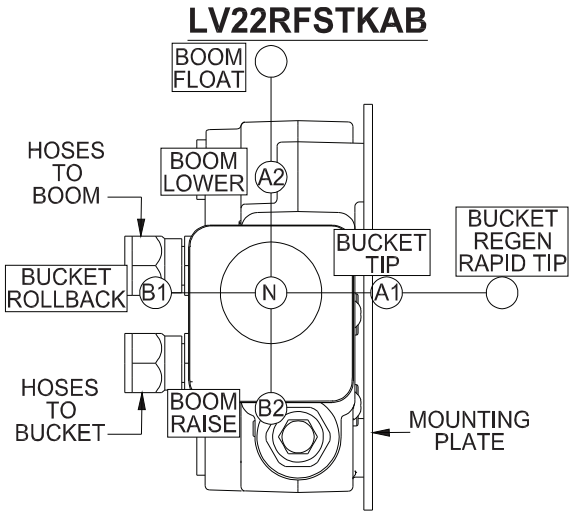
LV – JOYSTICK MOVEMENT SCHEMES: